GROMTOR Sp. z o o.
Lightning protection systems
st. Zacisze 3, 55-010 Groblice

DATA SHEET

Cross connector L-65 for wire Ø 8–10 mm and flat conductor ≤ 40 mm, Cu

Product code

101614

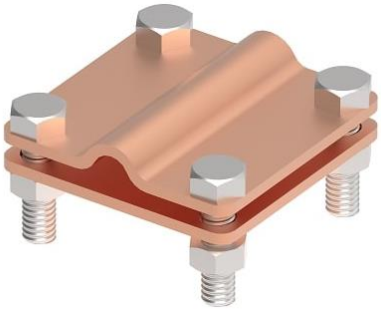

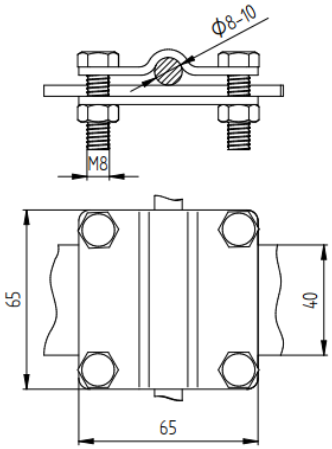

Technical description

Connector for cross-connection and T-type connection of Ø(8-10)mm wire and flat conductor ≤ 40mm for lightning protection, earthing and equipotential bonding system. Mounting by means of 4pcs M8x25 hexagon screws.

Technical data

Material	Copper
Weight (1 unit)	0,24 kg
In accordance with the standard	EN-62305
Meets the requirements of the standard	EN 62561-1
Ean code	5903699800294
Customs code	83024190

Due to continuous technological development, the company reserves the right to change the technical parameters of the products.
The illustrations shown are not binding.