DATA SHEET

Cross connector L-65 for wire Ø 8–10 mm, flat conductor ≤ 40 mm and rod Ø 20 mm, Cu

Product code

111314

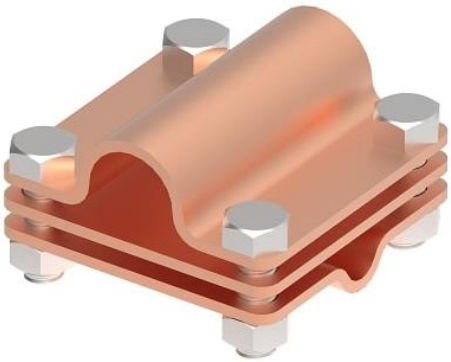

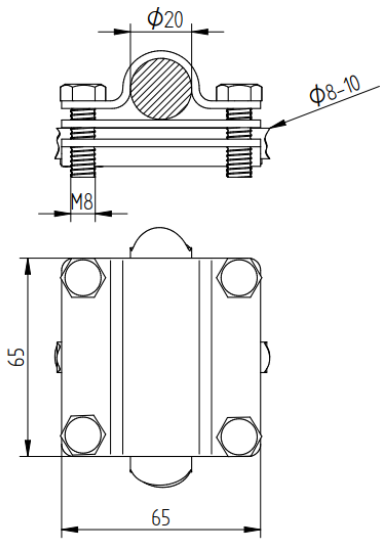

Technical description

Connector for cross and T-type connections. The connector is used for Ø(8-10)mm wire , flat conductor ≤ 30mm and Ø20mm rod for lightning protection, grounding and equipotential bonding system. Mounting with 4pcs M8x25 hexagon head screws.

Technical data

Material	Copper
Weight (1 unit)	0,34 kg
In accordance with the standard	PN-EN-62305-3
Meets the requirements of the standard	PN-EN 62561-1
Ean code	5903699805237
Customs code	83024190

Due to continuous technological development, the company reserves the right to change the technical parameters of the products.
The illustrations shown are not binding.